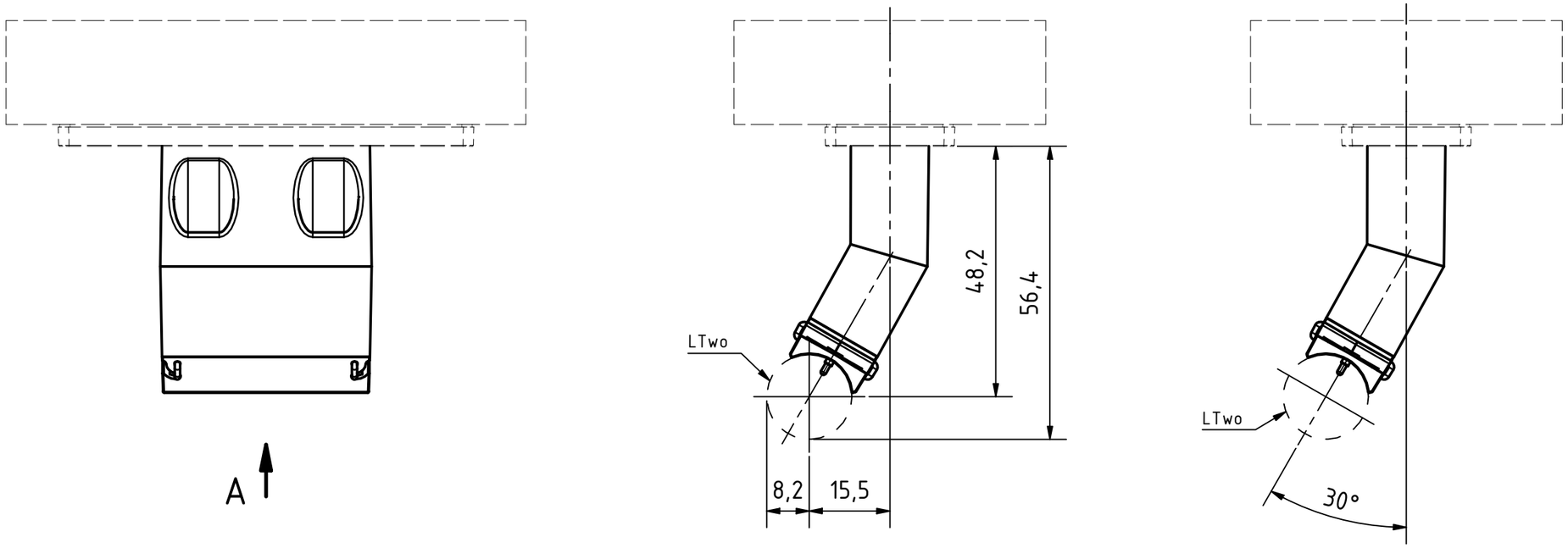

A (1 : 1)

Compatible with all screw-on accessories.
Example: rectangular mounting bracket surface.

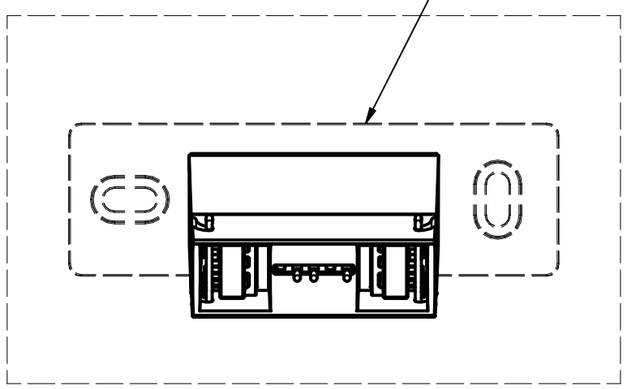

INDEX	TITLE	DATE	NAME

APL AG
Lahnstr. 30
45478 Mülheim
Germany

	DATE	NAME
CREATOR	29.11.2023	Bleul
CONTROL		
APPROVAL		

LTwo® socket MS5 with
30° angle adapter

M = 1 : 1

1/1

A3