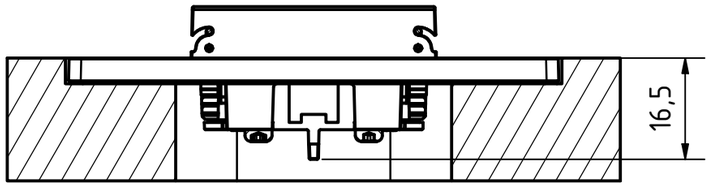

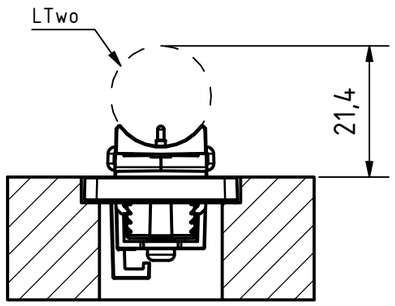

Cutout for recessed mount (1 : 2)

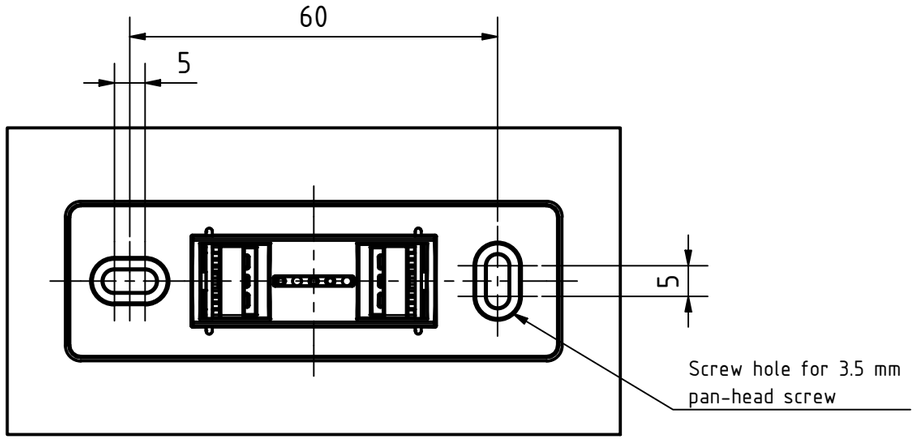

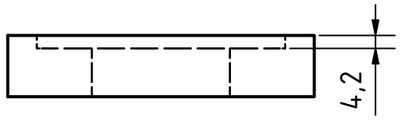

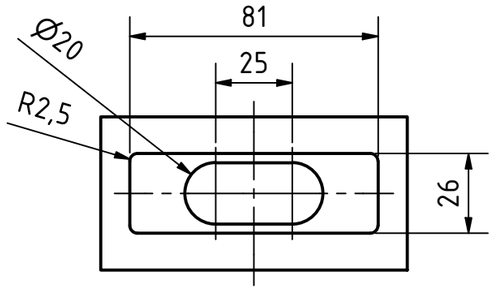

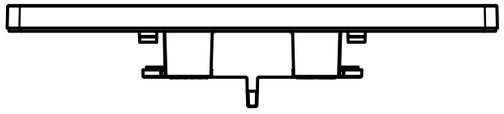

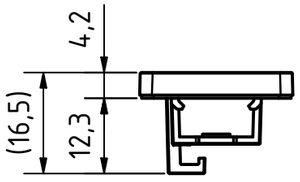

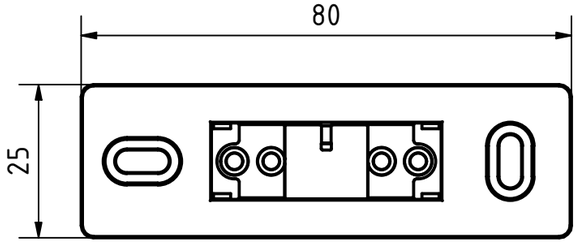

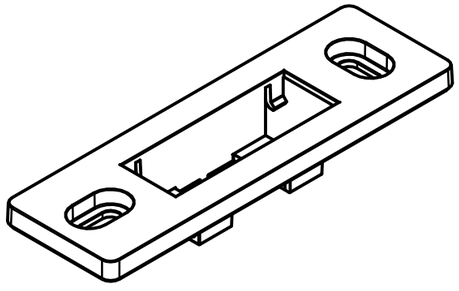

INDEX	TITLE	DATE	NAME

APL AG
Lahnstr. 30
45478 Mülheim
Germany

	DATE	NAME
CREATOR	29.11.2023	Bleul
CONTROL		
APPROVAL		

LTwo® socket MS5 with rectangular mounting bracket recessed mount

M = 1 : 1

1/1

A3