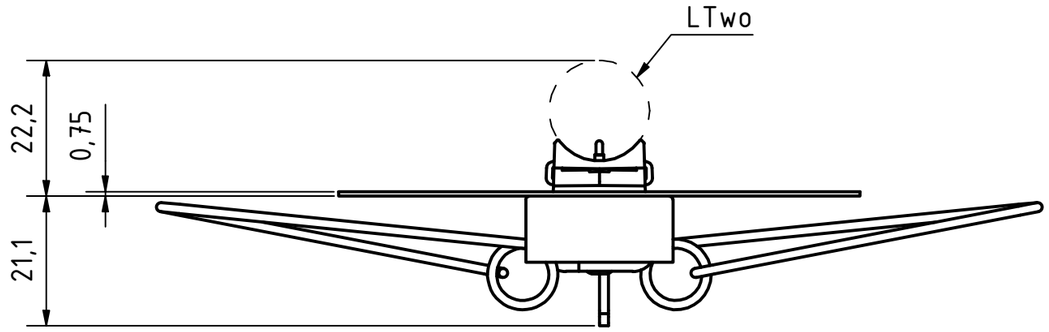

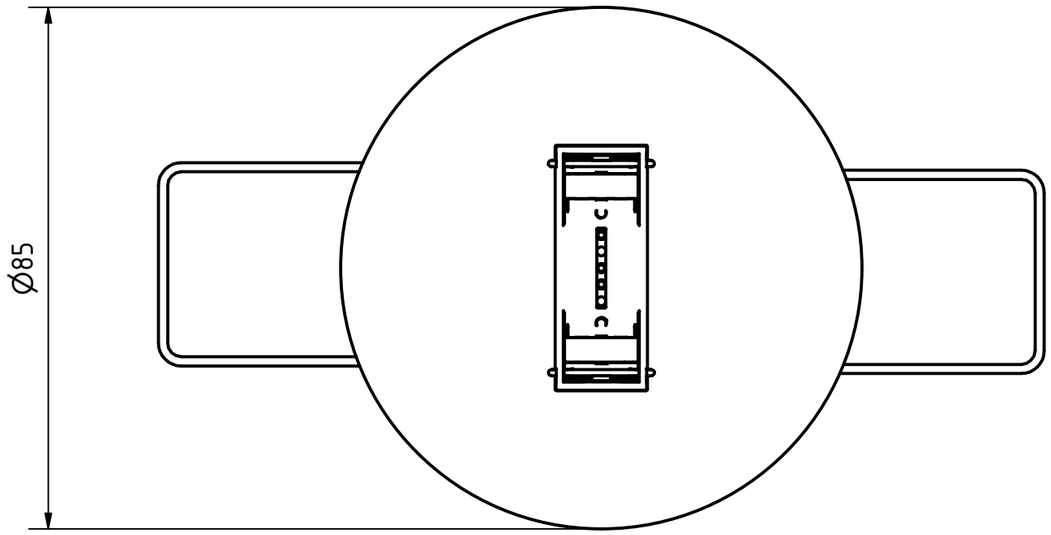

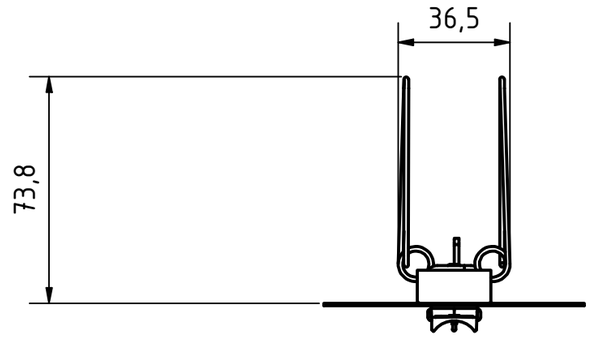

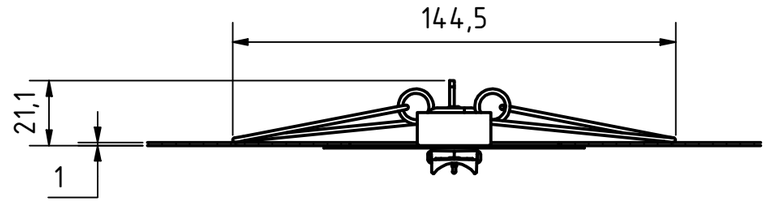

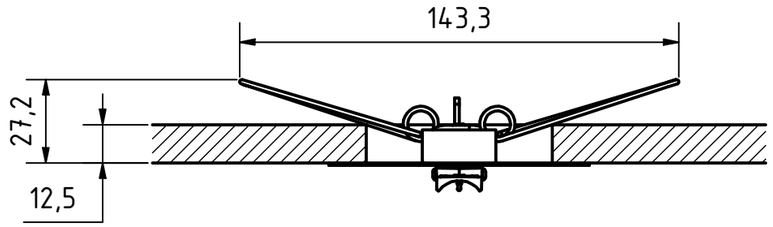

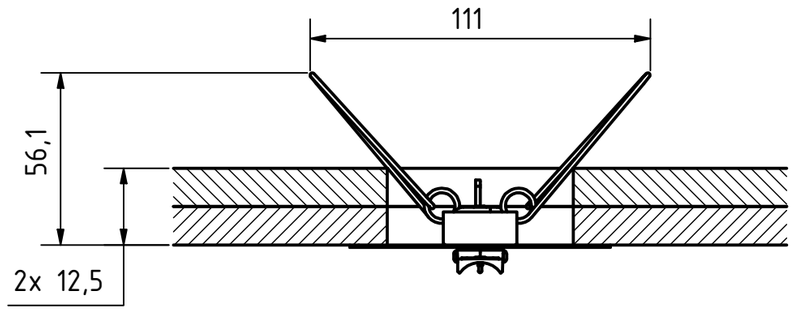

Cutout for recessed mount (1 : 2)

min. Ø50 / max. Ø70

(recommended Ø68)

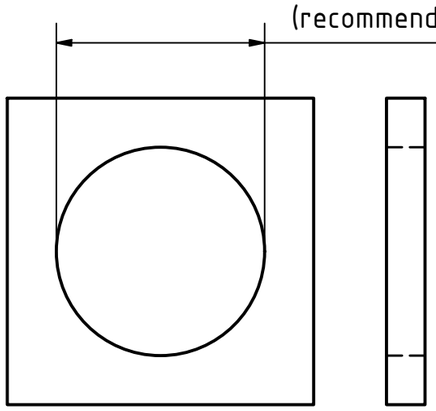

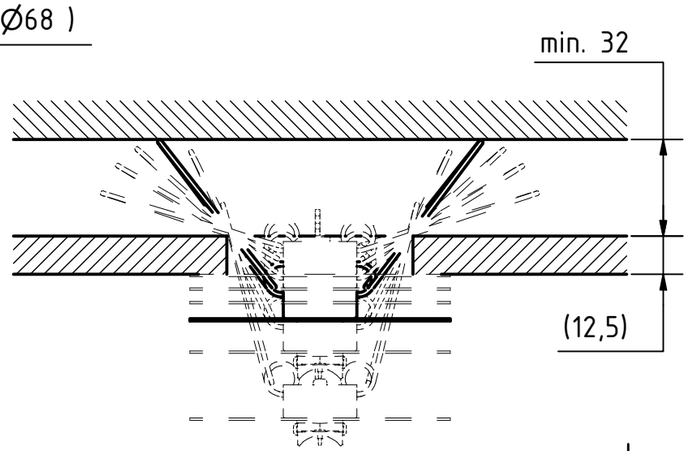

INDEX	TITLE	DATE	NAME

APL AG
Lahnstr. 30
45478 Mülheim
Germany

	DATE	NAME
CREATOR	29.11.2023	Bleul
CONTROL		
APPROVAL		

Lumami® DOWNLIGHT R85

M = 1 : 2

1/1

A3