OBO-RKSM-Adapter-UL1-B

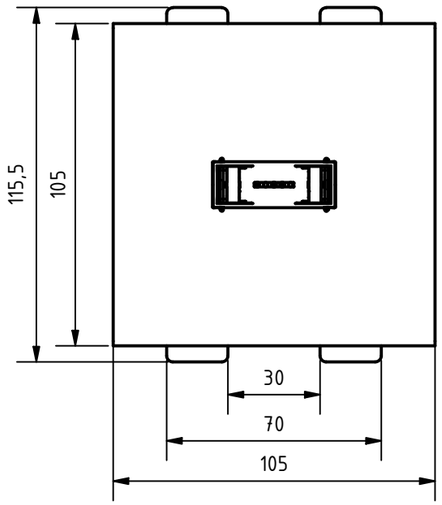

OBO-RKSM-Adapter-UL2-B

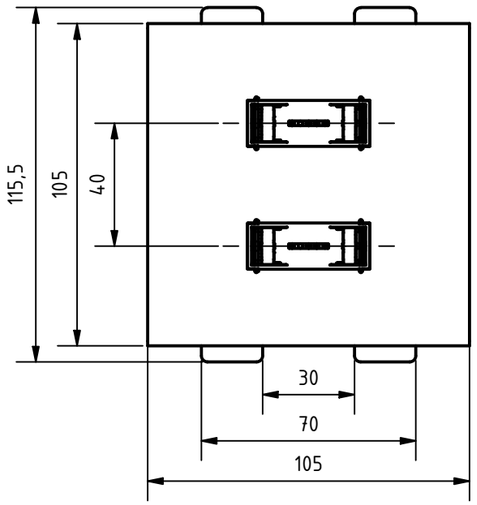

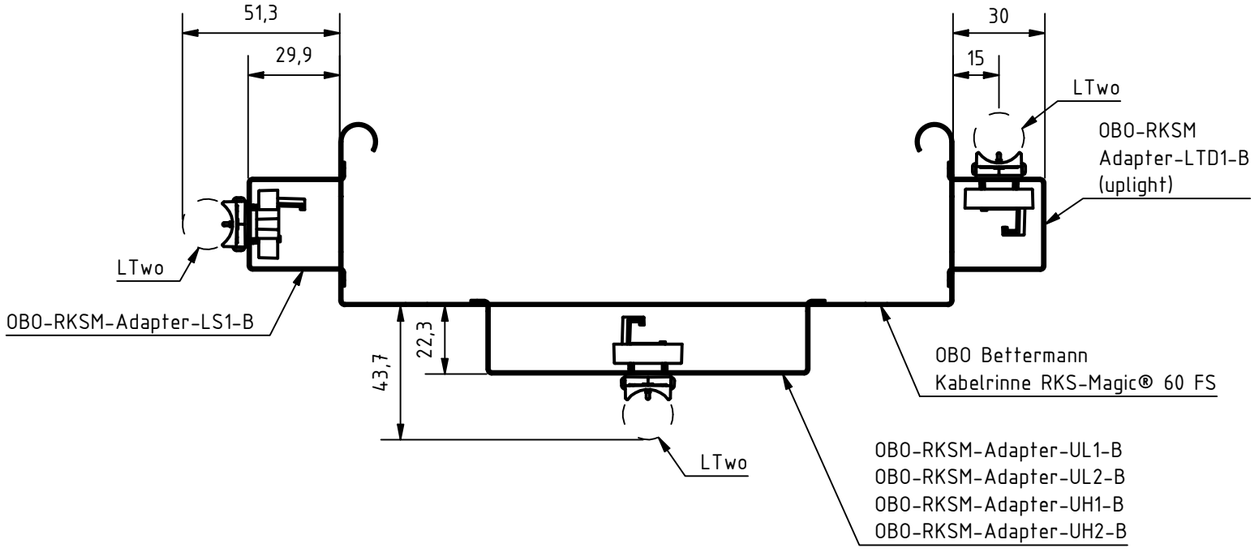

OBO-RKSM-Adapter-UH1-B

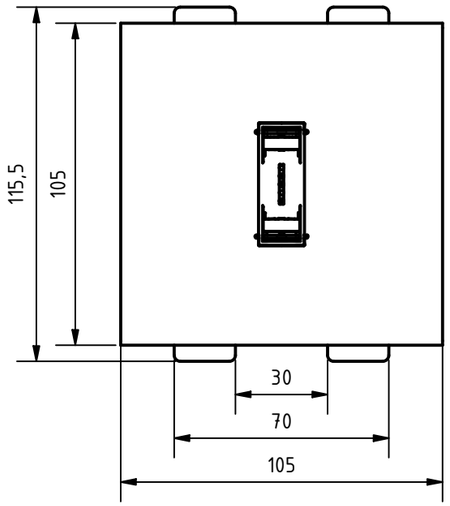

OBO-RKSM-Adapter-UH2-B

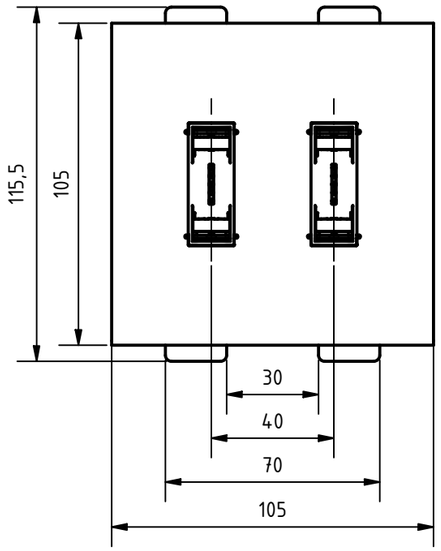

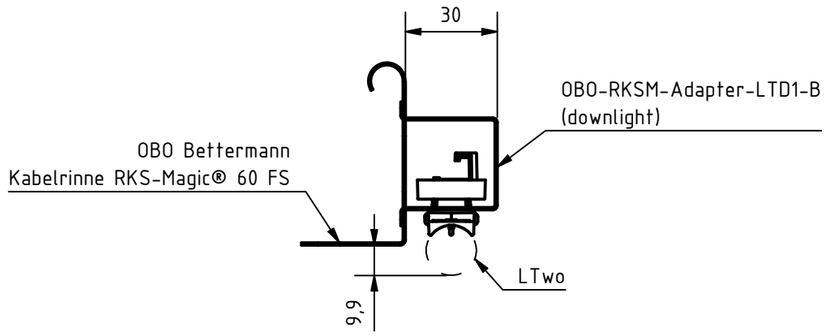

OBO-RKSM-Adapter-LS1-B

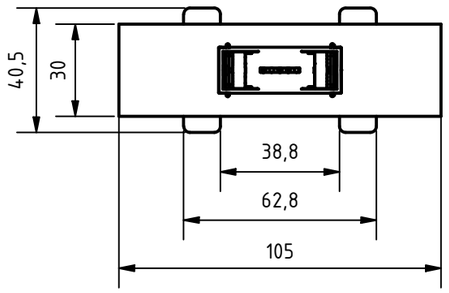

OBO-RKSM-Adapter-LTD1-B

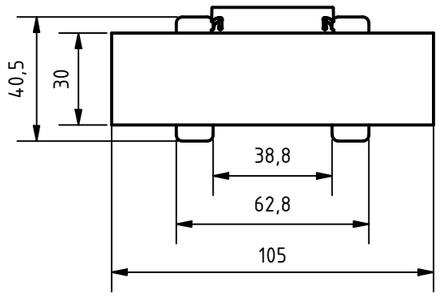

INDEX	TITLE	DATE	NAME

APL AG
Lahnstr. 30
45478 Mülheim
Germany

	DATE	NAME
CREATOR	05.06.2025	Bleul
CONTROL		
APPROVAL		

Lumami® RKSM ADAPTER

M = 1 : 2

1/1

A3